MOUNTING INSTRUCTIONS

6861 安 裝 說 明

1.) Use a unit of assembled accessory as template to locate appropriate drilling centers with pencil.
使用一組裝配完整的配件量測, 並用鉛筆在預定鑽孔的位置 , 畫上記號.

2.) Disassemble **Brackets** away from the unit of accessory.
把固定基座從整組裝配的配件上拆卸下來.

3.) Use 6mm drilling bit to drill holes in your marked locations, when mounting on drywall, insert **Plastic Anchors**.
當安裝在水泥牆,使用1/4英吋鑽頭,鑽孔深度4公分,崁入塑膠塞並使之齊平於牆面.

4.) Attach **Bracket** to wall with **Wall Screws**.
將固定基座以螺絲鎖在牆面上.

5.) Insert the **Main Body** into **Brackets**, and secure the **Set Screws** for installation.
在固定基座上面掛住產品本體,再用六角板手將埋頭螺絲鎖緊,完成安裝程序.

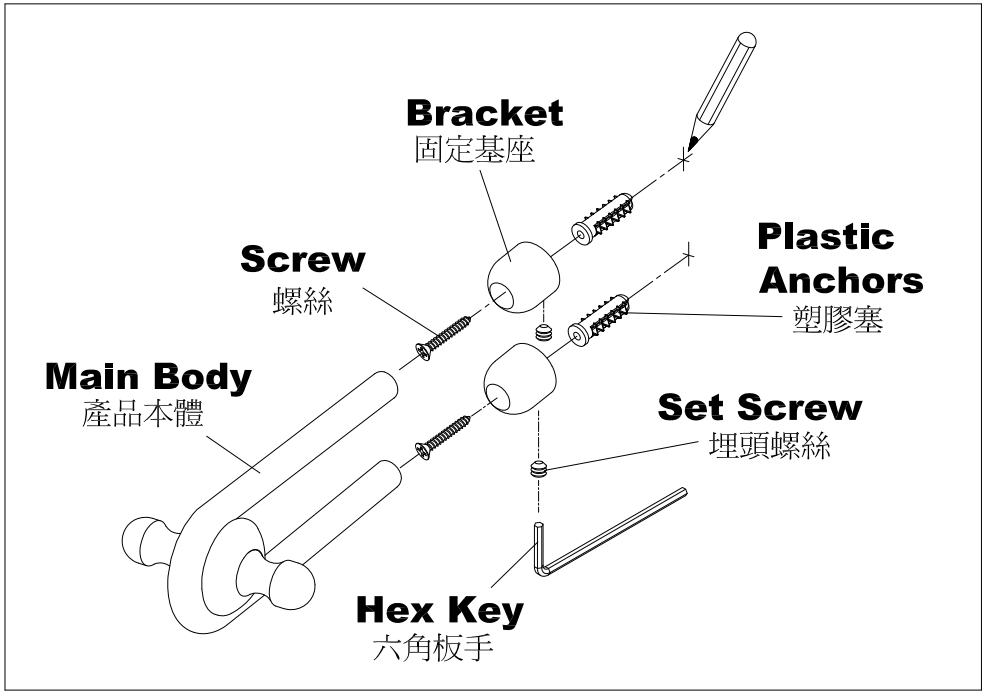
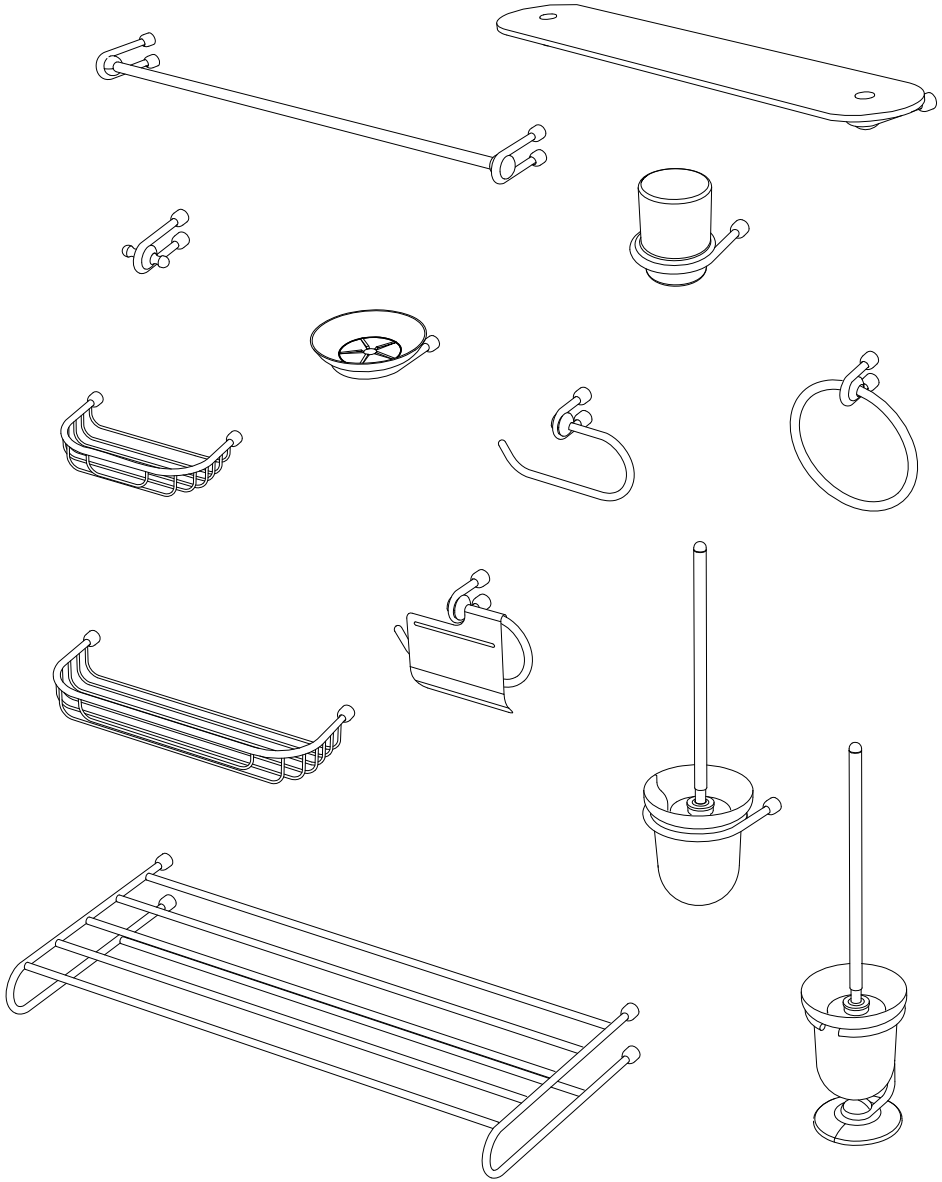
6861 SERIES: